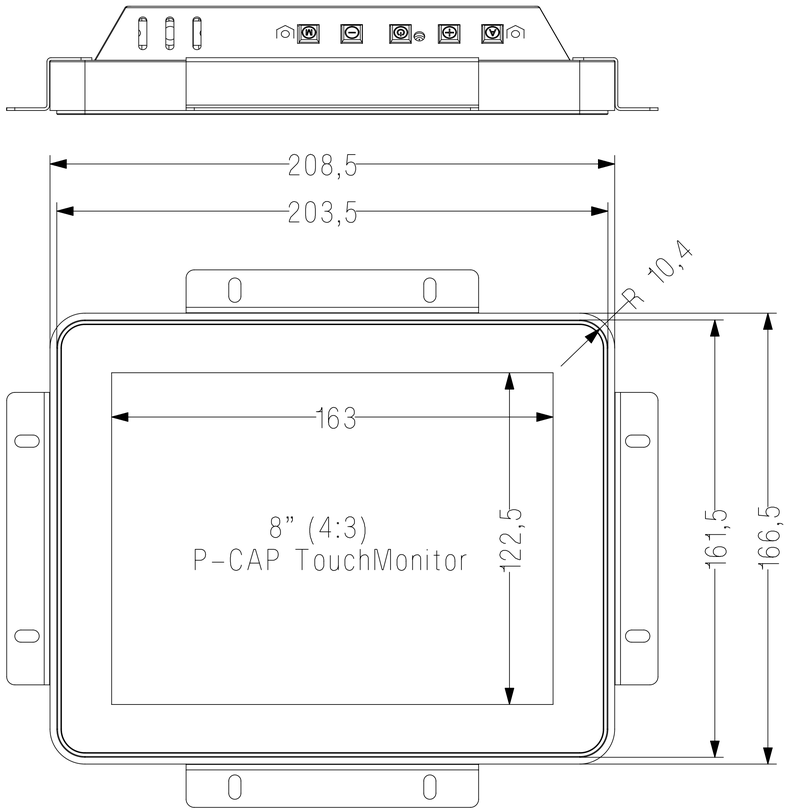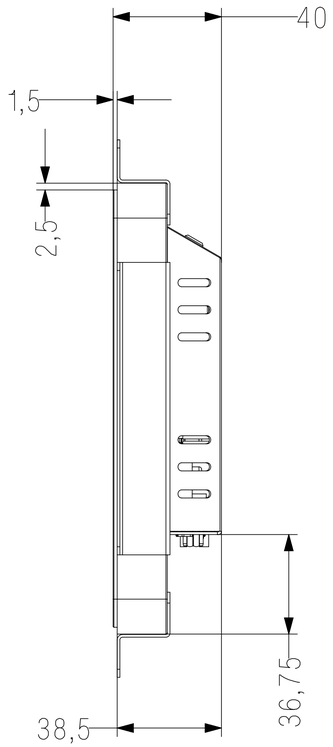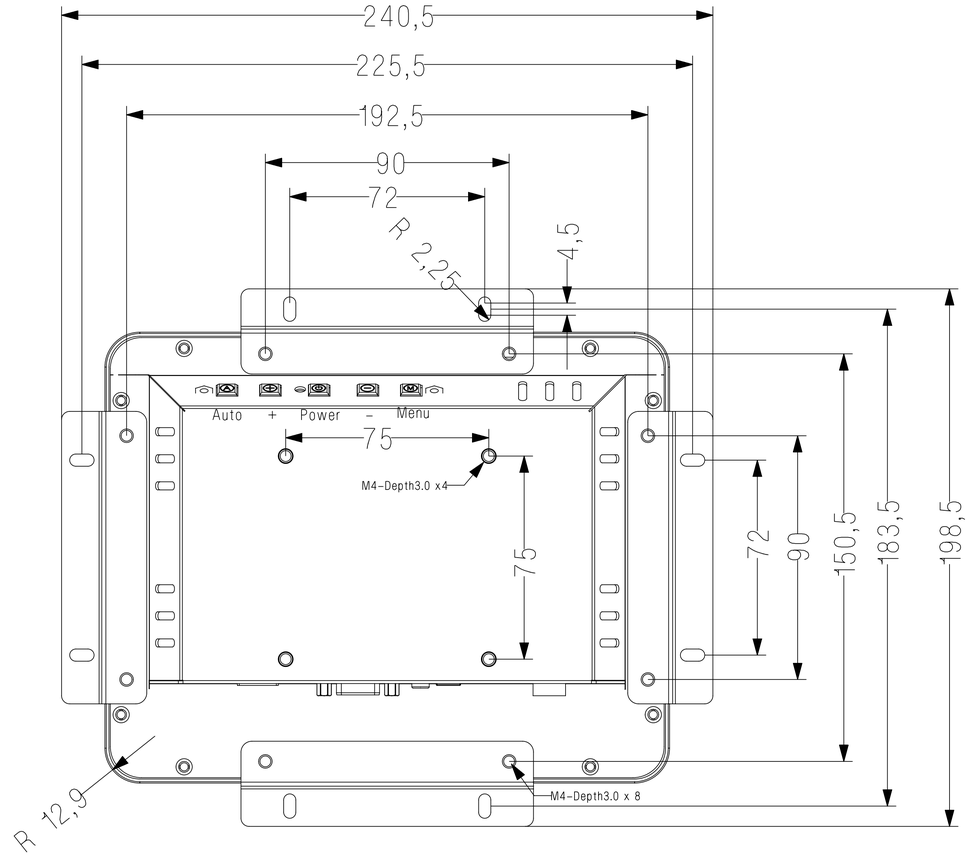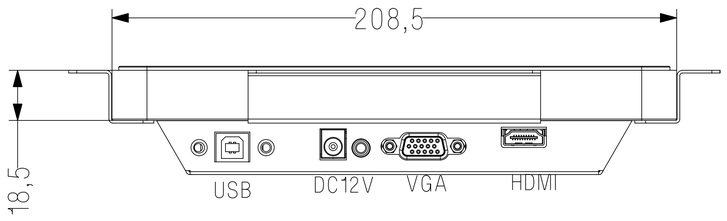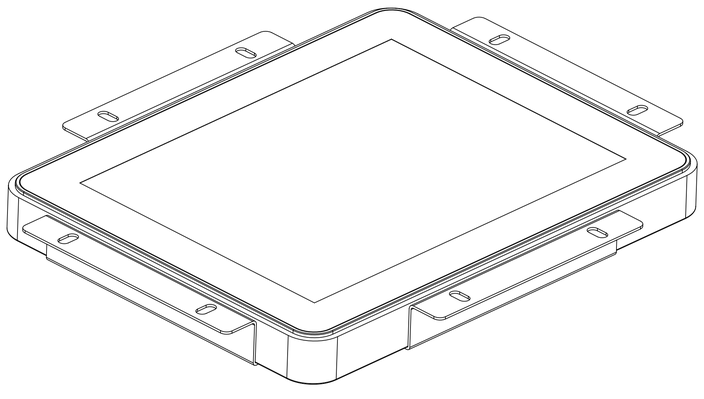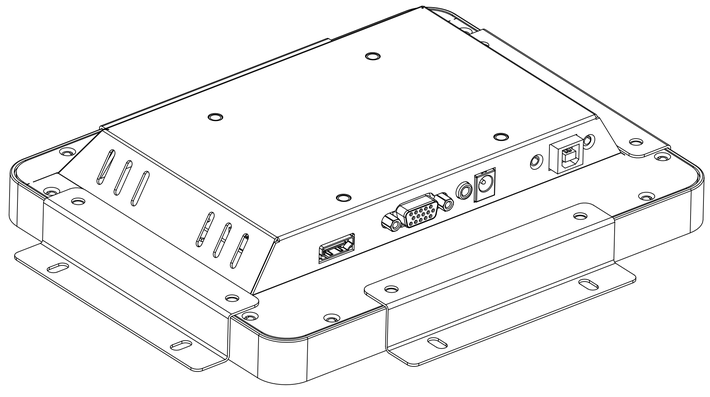20-Jul-2021 15:34:16 Create By fhr